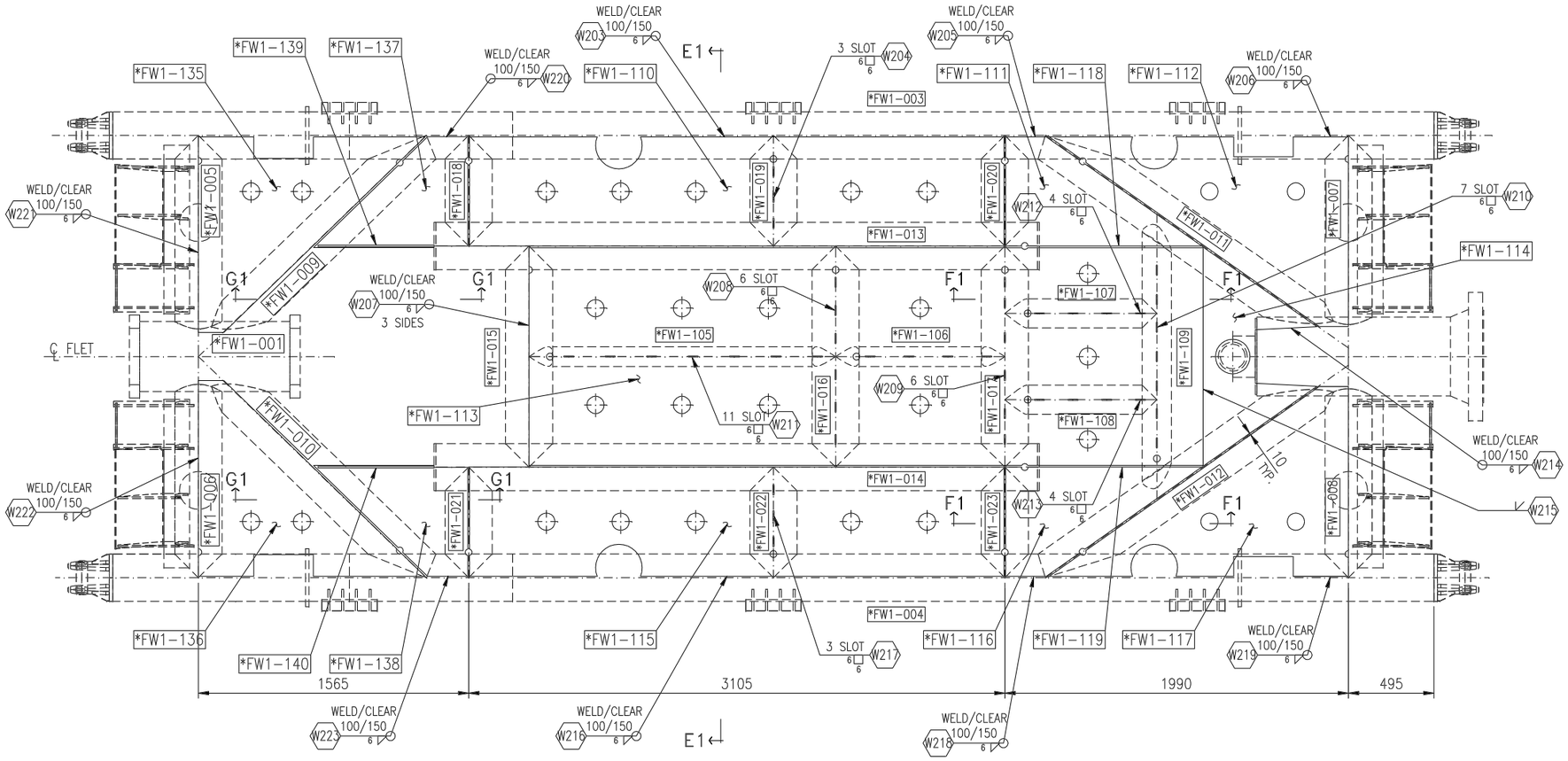

MUDMAT MAIN STRUCTURE - PLAN VIEW

NOTE: WHEW ASSEMBLING THE BOTTOM PLATE ENSURE THAT 40MM DIA. HOLES COINCIDE WITH PIPE 14MM DIA. BOTTOM VENT HOLES

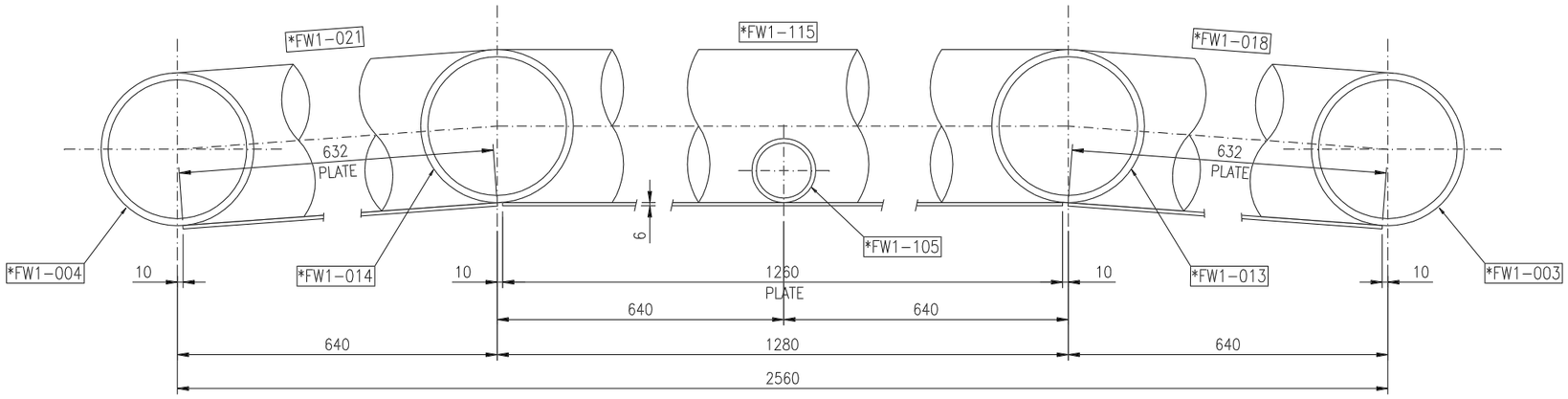

SECTION E1-E1

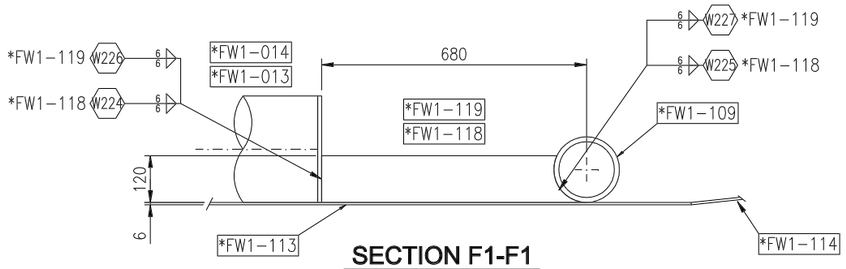

SECTION F1-F1

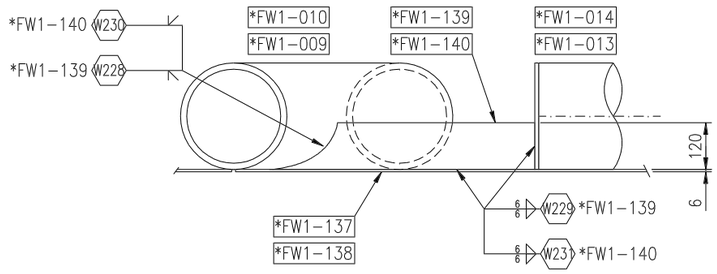

SECTION G1-G1

NOTES

1 – ALL DIMENSIONS ARE IN MILLIMETRES U.N.O.
2 – ALL ELEVATIONS ARE REFERRED TO MEAN LOW WATER (M.L.W.) ± 0.00 m.
3 – THE SYMBOL Wxx INDICATES WELDS TO BE PERFORMED DURING ERECTION
4 – *FW1-xxx = 1FW1-xxx , 2FW1-xxx (MARK; ITEM NO.)
5 – 2 NO. REQD. MEANS 1 FOR 1FW1 & 1 FOR 2FW1
6 – ● VENT HOLE NEAR SIDE
7 – FABRICATOR TO INSTALL ELASTOMETRIC CHECK VALVES IN EACH HOLE TO PREVENT FREE CIRCULATION OF WATER INSIDE MEMBERS FOR "IN-PLACE" CONDITIONS
8 – CONTACT SURFACES BENEATH WASHERS/NUTS SHALL BE LEFT BARE (OR PAINT REMOVED, IF ANY) FOR BOLTED CONNECTIONS TO GUARANTEE ELECTRICAL CONTINUITY
9 – WELD NUMBER: W203 – W231

Rev.	Date	DESIGNATION	Initiator	Reviewed by	Approved by
0	30-01-07	ISSUED FOR CONSTRUCTION	M.A.	L.O.	C.A.

"WARNING: This document as printed may not be the latest version. Please refer to the electronic file in the MDR tools"

Saipem

TOTAL UPSTREAM NIGERIA LIMITED
NIGERIA - OML 130
AKPO Field Development Project

TOTAL

Saipem contracting Nigeria

UMBILICALS, FLOWLINES AND RISERS (UFR)
WATER INJECTION FLET TYPE FW1
ASSEMBLY–MUDMAT MAIN STRUCTURE
PLAN & SECTIONS E1–E1 ÷ G1–G1

	Revision	Status	Class	Scale	PAGE
SCNL : Doc. ref. NG50-3-202-FAB-DW-AB-56-2441	0	IFC	-	-	11/11

This drawing and the design it covers are the property of SAIPEM SCNL. They are merely loaned and on the borrower's express agreement that they will not be reproduced, copied, loaned, exhibited, nor used except in the limited way and private use permitted by any written consent given by the lender to the borrower.